TRANBERG® Windsock

Series TEF9968 with Internal Illumination and Obstruction Light
Zone 1 & 2, Safe Area

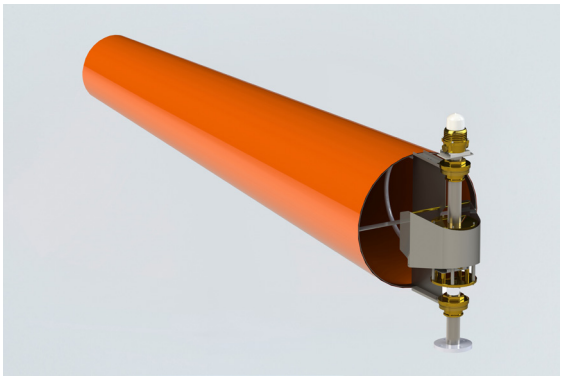

- NORSOK C-004 Compliant
- Rugged and solid construction
- Easy to install and maintain. Maintenance free lights.
- The windsock is internally lit with red light, causing minimal glare and minimal reduction in pilot's ability to see in the dark
- Delivered with 10 meter flying lead armored cable Ø 13 ± 1,5 mm (other lengths on request)
- Red + IR (NVG compatible) obstruction lights available
- Resistant to vibrations
- Bearing for the rotating wind vane is encapsulated in solid brass housing
- EN/DIN mounting flange for 60,3 mm pipe
- Delivered with one spare windsock kit

MY R. STAHL T9968A

The TRANBERG® TEF9968 LED illuminated windsock provides pilots with an indication of the wind direction as required by IMO, CAA CAP 437 and ICAO Annex 14. These regulations require the presence of at least one illuminated windsock.
The TEF9968 LED illuminated windsock is designed out of corrosion resistant materials. All exposed materials are stainless steel AISI 316L and brass. The windsock is internally lit with red LED light, causing minimal glare and minimal reduction in a pilot's ability to see in the dark.
Optionally delivered with a RED IR (NVG compatible) obstruction light on top. The rugged construction with integrated LED lights and no use of electrical slip ring units - significantly reduce maintenance cost resulting in extremely low lifetime cost.

Applications:
Wind indication on
- Helideck landing areas
- Airports
- Bridges
- Highways

	IECEx / ATEX					
Zone	0	1	2	20	21	22
Installation in		•	•			

Selection Table					
AC rated operational voltage Frequency Input voltage		230 V 50/60 Hz 100 ... 254 V AC			
Effective luminous intensity	Length	Diameter	Old Art. No.	Art. No.	Weight
10 cd	1300 mm	0.3 m	99683112	325321	50 kg
	2400 mm	0.6 m	99686112	249708	55 kg
32 cd	1300 mm	0.3 m	99683122	332610	50 kg
	2400 mm	0.6 m	99686122	262998	55 kg
Rated operational voltage DC Input voltage		24 V 24 V DC +/-30 %			
Effective luminous intensity	Length	Diameter	Old Art. No.	Art. No.	Weight
10 cd	1300 mm	0.3 m	99683111	332689	50 kg
	2400 mm	0.6 m	99686111	332696	55 kg

32 cd	1300 mm	0.3 m	99683141	332690	50 kg
	2400 mm	0.6 m	99686141	267588	55 kg

Technical Data

Explosion Protection	
Area of application	European Union (ATEX) IECEx
IECEx gas explosion protection	Ex eb mb op is IIC T5 Gb
ATEX gas explosion protection	Ⓔx II 2 G Ex eb mb op is IIC T5 Gb
Installation	in Zone 1, 2 and in safe areas
Electrical Data	
Power	15 W
Ambient Conditions	
Ambient temperature	-55 °C ... +55 °C
Operating temperature	-20 °C ... +55 °C
Lighting Data	
Lamp	LED
Light colour	Red
Mechanical Data	
Degree of protection (IP) (IEC 60529)	IP66/IP67
Enclosure material	Brass, Stainless steel 1.4404
Material dome	Polycarbonate
Colour	Orange

Spare Parts

Figure	Description	Art. No.	Weight
Bearing			
	Full bearing for windsock arrangement Old Art. No. 7850 000	248112	3.2 kg
Flange			
	Flange for mounting on 60.3 mm pipe. Max. Ø=61 mm, complete with bolts and nuts Old Art. No. 7852 007	333052	10 kg
	Flange for welding to 60.3 mm pipe, stainliess steel 1.4404, complete with bolts and nuts Old Art. No. 7852 008	333053	5 kg
Power supply			
	Power supply for 9968 200, 100-254 V AC input, 24 V DC output. Mounted in Junction box TEF 1058 3501. For safe area only. Contact Tranberg for availability for a zone 2 version. Old Art. No. 7852 009	332789	10 kg
Windsock			
	ø = 0.3 m; L = 1.3 m; colour: orange Old Art. No. 7852 006	241978	1 kg
	ø = 0.6 m; L = 2.4 m; colour: red/white Old Art. No. 7852 005	241977	100 g
	ø = 0.6 m; L = 2.4 m; colour: orange Old Art. No. 7852 004	340880	-

Dimensional Drawings (All Dimensions in mm [inches]) – Subject to Alterations

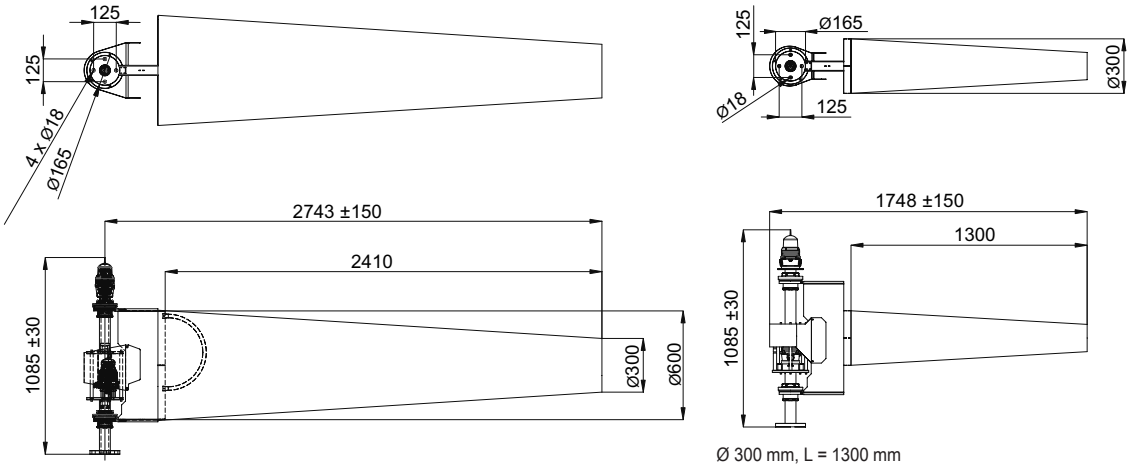

Ø 600 mm, L = 2400 mm

Ø 300 mm, L = 1300 mm